ExoCase Large

The ExoCase Large is a square floodlight for outdoor installation on a façade/ wall. The ExoCase Large can also be supplied as with an optional extended fixing bracket (short and medium brackets supplied as standard) The ExoCase Large is constructed from die-cast, powder coated aluminium and features a tempered safety glass, silicone gasket & stainless-steel screws.

Colour Options	Textured Grey, Matt White, Matt Black.
Output:	1152lm (830, 10°), 1095lm (830, 30°), 1060lm (830, 45°), 1200lm (830, 10°), 1160lm (840, 30°), 1083lm (840, 45°)
Wattage:	12w.
Efficacy:	86–100 lm/w.
Construction:	Aluminium body.
IP Rating:	IP65.
Driver:	Electronic/ DALI.

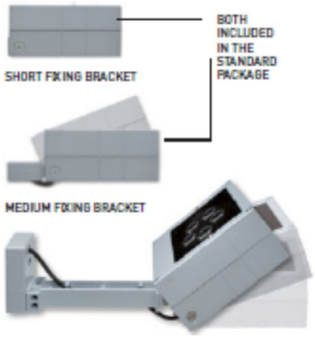

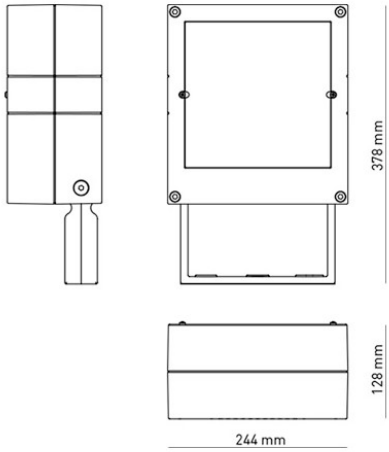

To specify choose one entry from each column, e.g. "ECLG HF GS 01 SL" (option columns may be omitted if not required)

Name	Option	Accessory	Output (lm)	Trim
ECLG (ExoCase Large)	HF DD (DALI)	EXT (Extended Fixing Bracket)	**01** - 1152lm (10°, 3000K) **02** - 1095lm (30°, 3000K) **03** - 1060lm (45°, 3000K) **04** – 1200lm (10°, 4000K) **05** – 1160lm (30°, 4000K) **06** – 1083lm (45°, 4000K)	WH (Matt White) BK (Matt Black) TG (Textured Grey)

ADVANCED LIGHTING TECHNOLOGY (UK) LTD. Regent's Place. 338 Euston Road, London NW1 3BT.
Telephone: +44 (0) 207 127 4204 Web: www.advancedlighting.co.uk Email: sales@advancedlighting.co.uk