ExoCase Midi

The ExoCase Midi is a square floodlight for outdoor installation on a façade/ wall. The ExoCase Midi can also be supplied as with an optional extended fixing bracket (short and medium brackets supplied as standard) The ExoCase Midi is constructed from die-cast, powder coated aluminium and features a tempered safety glass, silicone gasket & stainless-steel screws.

Colour Options	Textured Grey, Matt White, Matt Black.
Output:	720lm (830, 10°), 686lm (830, 30°), 650lm (830, 45°), 750lm (830, 10°), 713lm (840, 30°), 677lm (840, 45°)
Wattage:	8w.
Efficacy:	81–93 lm/w.
Construction:	Aluminium body.
IP Rating:	IP65.
Driver:	Electronic/ DALI.

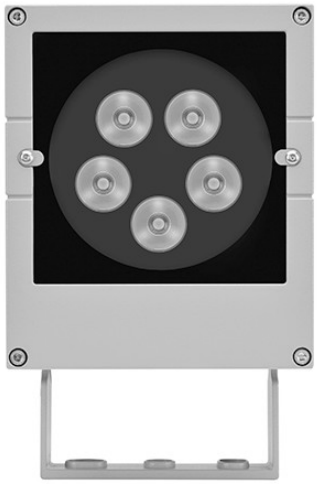

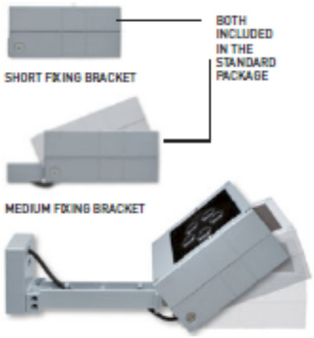

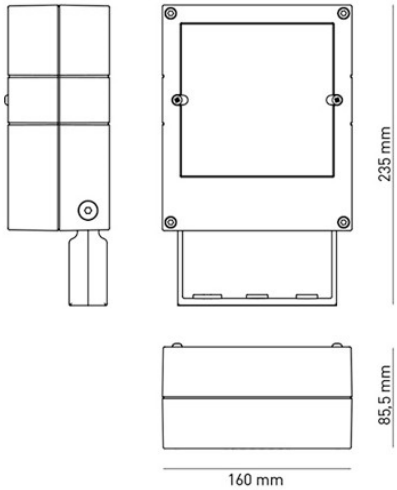

To specify choose one entry from each column, e.g. "ECMD HF GS 01 SL" (option columns may be omitted if not required)

Name	Option	Accessory	Output (lm)	Trim
ECMD (ExoCase Midi)	HF DD (DALI)	EXT (Extended Fixing Bracket)	**01** - 720lm (10°, 3000K) **02** - 686lm (30°, 3000K) **03** - 650lm (45°, 3000K) **04** – 750lm (10°, 4000K) **05** – 713lm (30°, 4000K) **06** – 677lm (45°, 4000K)	WH (Matt White) BK (Matt Black) TG (Textured Grey)

ADVANCED LIGHTING TECHNOLOGY (UK) LTD. Regent's Place. 338 Euston Road, London NW1 3BT.
Telephone: +44 (0) 207 127 4204 Web: www.advancedlighting.co.uk Email: sales@advancedlighting.co.uk